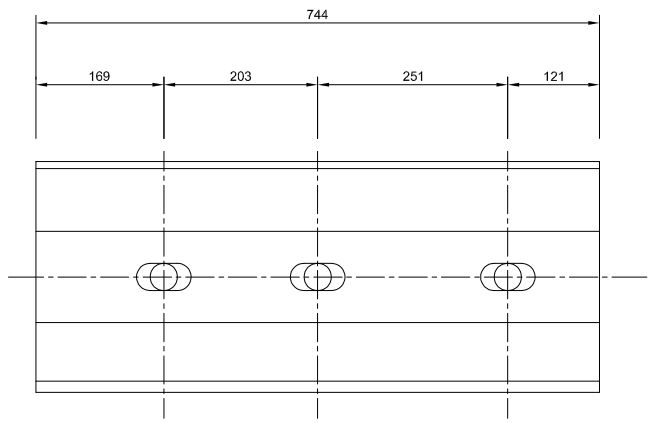

BODY LINER Mk 'H1'
No REQ'D:- 12
(CODE: 235-09)
COMM. CODE: 145-9003

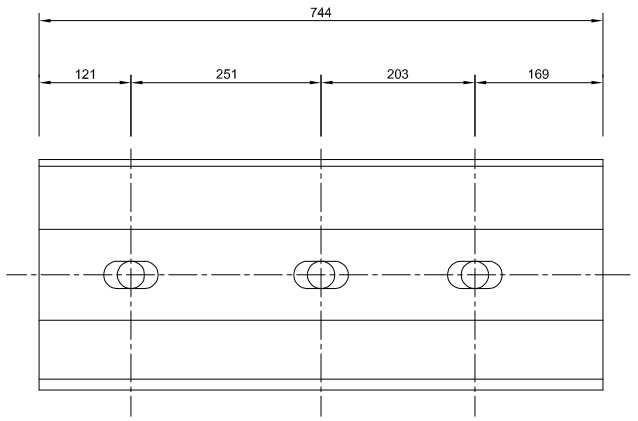

BODY LINER Mk 'H'
No REQ'D:- 11
(CODE: 235-08)
COMM. CODE: 145-9008

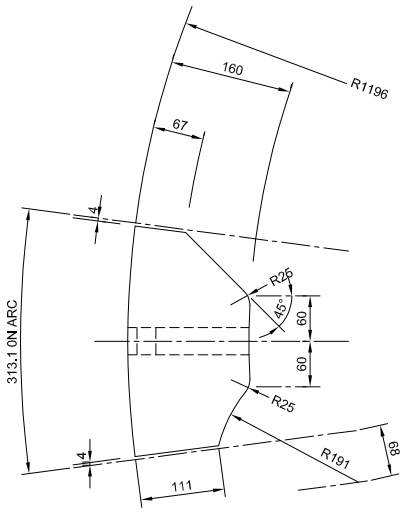

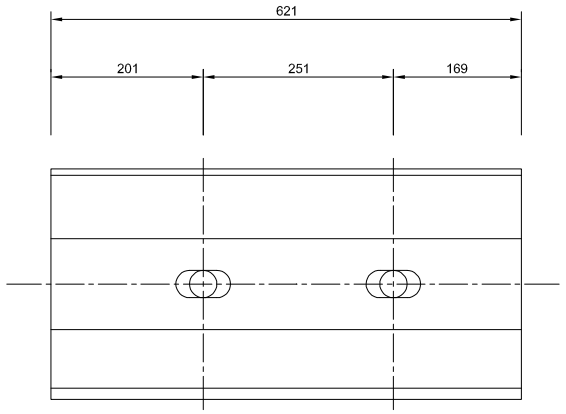

BODY LINER Mk 'F1'
No REQ'D:- 1
(CODE: 235-10)
COMM. CODE: 145-9005

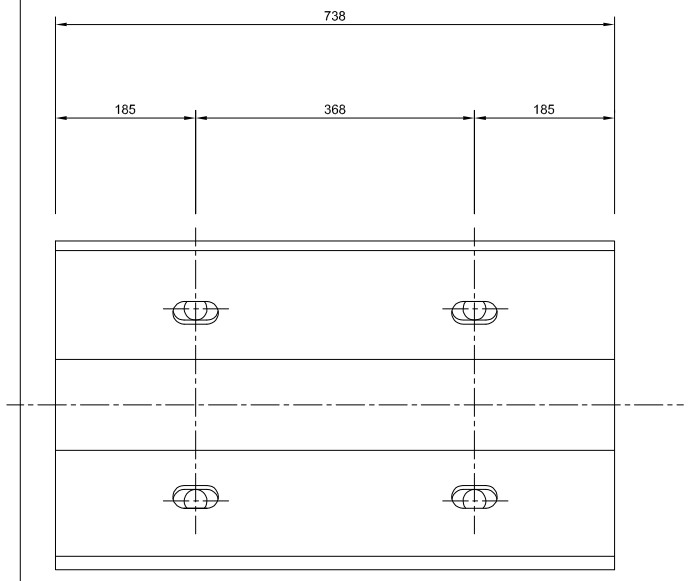

DOOR LINER Mk 'K'
No REQ'D:- 1
(CODE: 235-14)
COMM. CODE: 145-9007

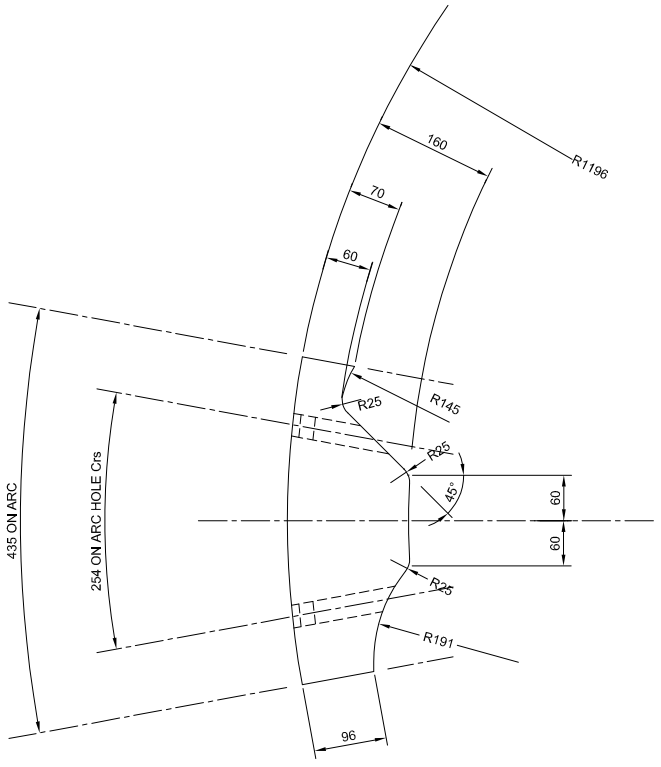

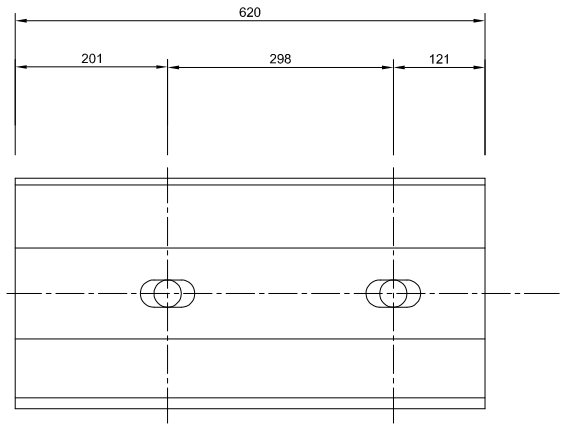

BODY LINER Mk 'G1'
No REQ'D:- 1
(CODE: 235-11)
COMM. CODE: 145-9004

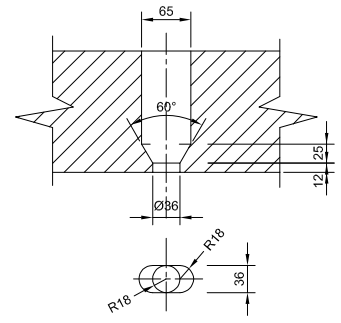

BOLT HOLE DETAILS FOR BODY LINERS.

NOTES.
1. MANUFACTURE IN ACCORDANCE WITH FOSKOR ENG. SPECS. LATEST REVISION.
2. REMOVE ALL SHARP EDGES.

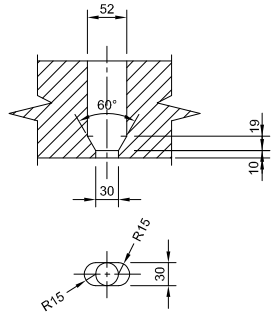

BOLT HOLE FOR DOOR LINER

MATERIAL: STEEL TO BS 4844 : 1986 - 3D-27% CHROME IRON

REV	REVISION	DATE	BY	CHK	APP
2	MATERIAL SPEC ADDED	050412	PH		

DRG N°:	REFERENCE DRAWINGS	DRG N°:	REFERENCE DRAWINGS

FOSKOR (PTY)LTD
P.O.BOX 1
PHALABORWA
TEL:(015)7892000
FAX:(015)7892244

FOSKOR

MILLS 1-3
Ø8'x12' ROD MILLS
BODY LINER DETAILS
SHEET 2 of 2

DRAWN	M M	DATE	99/05/11
CHECKED	A W	DATE	99/04/23
APPROVED	H VAN ZYL	DATE	99/04/23
SCALE	1:5	JOB N°:	

THE OWNERSHIP AND COPYRIGHT OF THIS DRAWING IS SUBMITTED BY FOSKOR LIMITED. THIS DRAWING IS SUBMITTED TO BE DISPOSED OF, USED, REPRODUCED, TRANSMITTED OR DISCLOSED BY TO ANYONE, FULLY OR PARTIALLY, WITHOUT FOSKOR LIMITED'S WRITTEN CONSENT.

DRAWING N°: 070 - 186

REVISION 2